JPIChE 54 (1) 2026: 49-60

PAKISTAN INSTITUTE OF CHEMICAL ENGINEERS
Since 1969

Journal of the Pakistan Institute of Chemical Engineers

Journal homepage: www.piche.org.pk/journals

DOI: https://doi.org/10.54693/piche.05414

Check for updates

Optimization Model for Transmission and Distribution a Natural Gas: A Case Study of the Gas Pipeline Network System

M. Aslam[1], U. Aslam[1], H.M.Z. Aslam[1*], M. Ashraf[2], A. Shehzad[3]

Submitted: 03/10/2025, Accepted:08/06/2026, Published: 18/06/2026

Abstract

With increasing demand of natural gas, Pakistan is trying to import it from neighbor countries. In this respect, new pipeline networks will be constructed to import gas from Russia or Iran. The construction of pipeline network is a capital-intensive process. Therefore, it is important to minimize the total life investment cost for an optimum design of pipeline network. The total life cost of a pipeline network depends on various factors such as pipeline diameter, thickness, compressor powers or operating conditions. In this study, a comprehensive optimization model has been developed to evaluate the optimum total life cost of natural gas pipeline network. The pipeline network contains both transmission and distribution pipelines. The transmission pipeline diameter, thickness and number of compressors are selected as the decision variables. The technical constraints are also considered in the optimization model to ensure safety, economics, and stability of pipeline network. These constraints are studied for different input variables. The optimization problem is mixed integer nonlinear programming type because it contains both discrete and continuous variables along with nonlinear equations. Therefore, rank optimization technique is used in this study. The developed optimization model is implemented on the case study using MATLAB software. The optimum total life cost of the case study has been investigated for different parameters.

Keywords: Transmission Pipeline, Total Life Cost, Natural Gas Network, Optimum Diameter, Gas Flow Rate, Distribution Pipeline

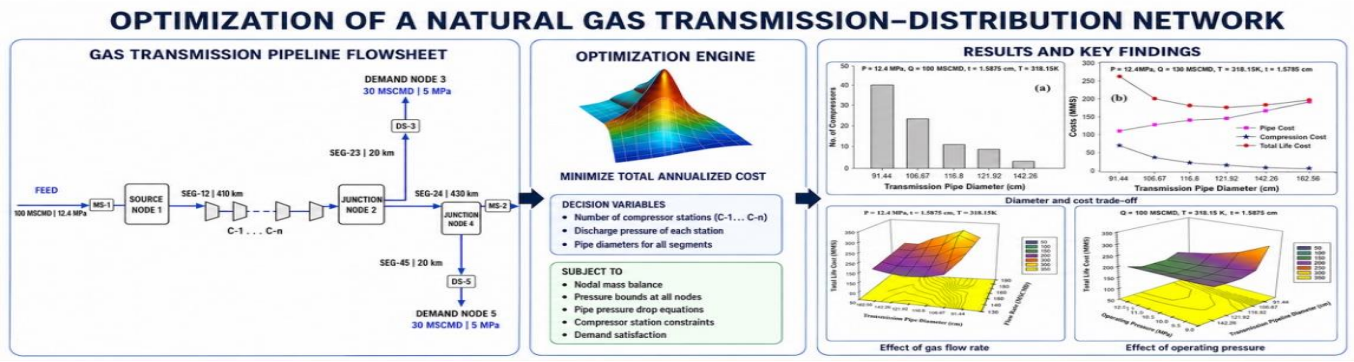

Graphical Abstract

[1] Department of Chemical Engineering, University of Engineering and Technology, Lahore, Pakistan.
[2] Institute of Chemical Sciences, Bahauddin Zakariya University, Multan, Pakistan.
[3] Sui Northern Gas Pipelines Limited (SNGPL), Lahore, Pakistan.
***Corresponding author:** Hafiz Muhmmad Zaheer Aslam (hmzaheer@uet.edu.pk)

Nomenclature

Symbol	Description
Abbreviations	
CC	Total compressor cost (Million $)
CNG	Cost of natural gas ($/kJ)
CC_{maint}	Compressors Maintenance Cost (Million $)
CC_{fuel}	Compressors Fuel Cost (Million $)
CC_{inv}	Compressors initial Investment Cost (Million $)
D_i	Pipeline Inside Diameter (cm)
D_o	Pipeline Outside Diameter (cm)
D_f	Design Factor (dimensionless)
e	Pipe Roughness (cm)
F	Economic Factor
f_i	Frictional factor (dimensionless)
G	Specific gravity of gas (dimensionless)
J_f	Joint Factor (dimensionless)
k	Specific heat ratio (dimensionless)
L_i	Pipe segment length (m)
L	Total Pipe length (m)
L_f	Location Factor (dimensionless)
m	Number of Compressors (dimensionless)
$\dot{m}$	Mass gas flow rate (kg/s)
MAP	Maximum allowable operating pressure (Pa)
n	Number of pipe segment (dimensionless)
N	Compressor power (kW)
P	Operating Pressure for transmission line (Pa)
P_b	Base Pressure (Pa)
P_i	Pressure at node i (Pa)
PC	Initial cost of the pipeline (Million $)
PC_{inv}	Pipeline initial Investment Cost (Million $)
PC_{maint}	Pipeline Maintenance Cost (Million $)
Q_i	Standard Volumetric Gas Flow Rate (MSCMD)
r	Interest Rate (dimensionless)
R	Gas Constant (J/kg/K)
R_e	Reynold Number (dimensionless)
R_{ec}	Critical Reynold number (dimensionless)
SYMS	Stress Yield (Pa)
T	Average Gas Temperature (K)
T_f	Temperature Factor (dimensionless)
T_b	Base temperarure (K)
TLC	Total life cost of the pipeline (Million $)
u_{max}	Maximum errosional velocity (m/s)
u_i	Gas velocity (m/s)
W	Pipe weight (tons)
Z	Compressibilty factor (dimensionless)

Greeks	
δ	Pipe thickness (cm)
ω	Inflation factor (dimensionless)
η_a	Adiabatic efficiency (dimensionless)
η_m	Mechanical efficiency (dimensionless)
ε_m	Compression ratio (dimensionless)
ρ	Gas Density (kg/m^3)
ρ_{steel}	Steel Density (kg/m^3)
μ	Viscosity (kg/m/s)
Subscript	
max	Maximum
IN	Inlet
OUT	Outlet

1. Introduction:

Energy is essential for life and directly affects the economy of any country. In Pakistan, energy production mainly depends on oil and gas and natural gas is a primary energy resource in its total energy mix i.e., around 50 percent. In 2021, the total consumption and local production of natural gas are recorded to be 3,723 MMCFD and 3,525 MMCFD respectively. The major portion of natural gas is obtained through country's own resources for the power generation, industrial, commercial, domestic and compressed natural gas (CNG) consumption [1]. The local production rate is decreased by 14% from 2015 to 2021 due to depletion of natural gas resources. Furthermore, the supply and demand gap is increasing every year due to the high demand rates. This gap is being filled by incorporating imported re-gasified liquified natural gas (RLNG). The value of RLNG is increased by 82.9% making it an expensive alternate [2]. Therefore, the government is trying to find other alternatives to fulfill the natural gas requirements. The import of natural gas through pipelines from neighbor countries is one of the alternatives. Currently, Pakistan is trying to import natural gas from Iran and Turkmenistan via pipeline networks. Pakistan is going to collaborate with Iran to import 8.7 billion cubic meters of natural gas. The total length of the gas pipeline is expected to be 785 kilometers within Pakistan which will pass through the areas of Baluchistan and Sindh. The expected cost of the project is $7.5 billion with pipe diameter of 56 inches [3–5].

The construction of a natural gas pipeline network is a capital-intensive process. Therefore, this process should be optimized for economical design and efficient

operation. The construction cost depends on various parameters such as pipeline diameter, thickness, compression ratio, operating pressure or number of compressors etc. [6,7,8–18]. A considerable work has been done for the natural gas pipeline network optimization. De-Wolf. et al, formulated a mathematical model with linear and non-linear constraints for the minimization of the total cost as the function of pipe diameter. They used simplex method for the optimization and developed piecewise linearization approximation for the nonlinear constraint of pressure drop equation [19]. Montoya-O. et al, applied the genetic algorithm optimization technique for optimal design of gas distribution network in Mexico valley. The objective function was the total investment cost and the decision variable was the pipeline diameter. Wu. et al, developed a mathematical model for the optimization of total cost of the pipelines. The pipeline diameter was used as the decision variable and the deterministic global approach based on primal-relaxed dual decomposition method is utilized [20]. Arsegianto. et al developed a non-linear optimization model on the case study of Grissik-Duri pipeline for the minimization of the total cost. They included the investment cost of compressors and pipeline along with the operating and maintenance costs and considered the time value of money by using the depreciation approach. The model calculated the diameter of pipeline and power consumption of compressor which resulted in minimization of the total cost [21]. Berge. et al, developed a computer program to optimize the total cost of the gas distribution network. In this study, they used the genetic algorithm as the optimization technique with diameter as the decision variable with constraints on node pressure and gas velocity [22]. Liang et al, established a mathematical model for optimization of the total cost of natural gas networks. They developed a hybrid optimization algorithm based on simulated annealing and particle swarm optimization techniques [23].

The above discussed studies only consider the transmission pipelines. Mathematical models were developed to optimize the total cost of a straight transmission pipeline. In this study both transmission and distribution pipelines are considered. A comprehensive mathematical model has been developed for the total cost optimization of whole pipeline network containing transmission as well as distribution pipelines. The model calculates the optimum total life cost of the network based on transmission pipeline diameter, thickness, and number of compressors. The distribution pipelines diameter at optimum total life cost was also calculated. A constraint analysis has also been conducted to visualize the effect of these constraints on the input variables. The effect of different parameters on optimum total life cost of the network has also been studied.

2. Case Study:

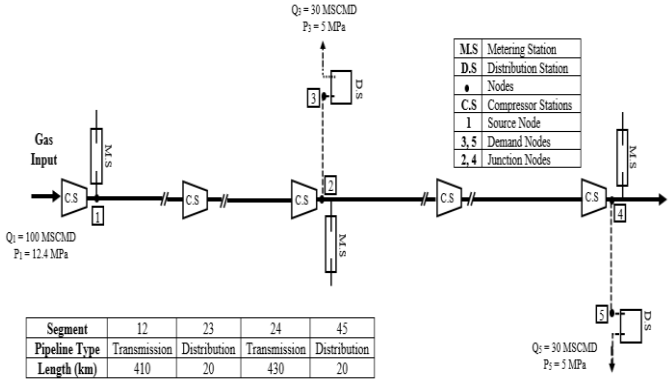

Segment	12	23	24	45
Pipeline Type	Transmission	Distribution	Transmission	Distribution
Length (km)	410	20	430	20

Figure 1: Natural Gas Pipeline Network Layout of the Case Study

The pipeline network layout for the case study is presented in Figure 1. The system features a single source node, supplying natural gas at a rate of 100 million standard cubic meters per day (MSCMD) and a pressure of 12.4 MPa. The gas is delivered to two demand nodes, each with a specified requirement of 30 MSCMD at 5 MPa. The analysis assumes the absence of compressor stations within the distribution segments. The total length of the main transmission pipeline is 840 km. Each of the two distribution branches has a length of 20 km and a specified delivery pressure of 5 MPa. The physical properties of the natural gas, required for the hydraulic calculations, are based on its composition. The typical composition for natural gas in Pakistan, used in this study, is provided in Table 1. An optimization algorithm was employed to determine the optimal system design. The decision variables were the transmission pipeline diameter, wall thickness, and the number of compressors. The objective function was the minimization of the Total Lifecycle Cost (TLC), with the design yielding the lowest TLC identified as optimal. Furthermore, the study investigates the sensitivity of the

TLC to key operational parameters, namely the source operating pressure and gas flow rate.

Table 1: Composition of Natural Gas [24]

Component	Composition (Mole %)
Methane	85
Ethane	5
Propane	2
Butane	1
Higher hydrocarbons	1.5
Carbon dioxide	2
Nitrogen	3.5

3. Mathematical Model:

A mathematical model comprises a system of equations formulated to describe a physical system. In the domain of natural gas pipeline optimization, problems are typically classified as either design or operational optimization; this work focuses on the design problem. Modeling a pipeline network involves numerous interdependent factors, introducing considerable complexity [25]. To achieve a tractable formulation, the system is assumed to operate under steady-state, isothermal conditions. Furthermore, the effects of pipeline elevation, along with gas accumulation and leakage, are considered negligible. The gas compressibility factor is held constant at 0.95, and all compressors are assumed to be identical centrifugal units.

In optimization frameworks, an objective function mathematically defines the system's performance criterion. For design optimization, the principal aim is to minimize the total capital investment. Therefore, the Total Lifecycle Cost (TLC) of the pipeline network is selected as the objective function. The TLC is defined as the sum of the total Pipeline Cost (PC) and the total Compression Cost (CC).

$$\min. \quad \mathrm{TLC} = \sum_{i}^{n} \mathrm{PC} + \sum_{i}^{m} \mathrm{CC} \qquad (1)$$

The total pipeline cost encompasses both the initial capital investment and the recurring maintenance expenditures for the network infrastructure. Similarly, the total compression cost comprises the initial capital outlay, ongoing maintenance, and the operational fuel costs for the compressors installed within the transmission lines. For the purpose of this analysis, the annual maintenance costs for both pipelines and compressors are estimated at 5% of their respective initial capital investments [8]. The maintenance and fuel costs are annual costs. Therefore, we must multiply these costs with an appropriate factor to convert them into lifetime costs. The factor should include the inflation and interest rates. This factor (F), an economic factor, is given by following equation.

$$F = \left(1 + \frac{1+\omega}{1+\mathrm{r}} + \left(\frac{1+\omega}{1+\mathrm{r}}\right)^{2} + \cdots \ldots \ldots + \left(\frac{1+\omega}{1+\mathrm{r}}\right)^{\mathrm{life}-1}\right) \qquad (2)$$

$$\mathrm{PC} = \mathrm{PC_{inv}} + \mathrm{PC_{maint}F} \qquad (3)$$

$$\mathrm{PC_{maint}} = 0.05\mathrm{PC_{inv}} \qquad (4)$$

$$\mathrm{CC} = \mathrm{CC_{inv}} + \mathrm{CC_{maint}F} + \mathrm{CC_{fuel}F} \qquad (5)$$

$$\mathrm{CC_{maint}} = 0.05\mathrm{CC_{inv}} \qquad (6)$$

The initial pipeline cost usually depends on outside pipe diameter (D_o), length (L) and thickness (δ). The effect of thickness on pipeline cost can also be represented in the form of pipeline weight (W). The following pipeline cost relation developed for API 5L is used in this study[8].

$$\mathrm{PC_{inv}} = 556.4\,\mathrm{D}_o\mathrm{L} + 1102.1\,\mathrm{W} \qquad (7)$$

$$\mathrm{W} = \rho_{\mathrm{steel}}\frac{\pi}{4}\left(\mathrm{D_o}^2 - \mathrm{D_i}^2\right)\mathrm{L} \qquad (8)$$

The initial compression cost depends on the compressor power and number of compressors. The centrifugal compressors are used in this study and following mathematical relation is used to calculate the initial investment cost of compressors [8].

$$\mathrm{CC_{inv}} = 2800000 + 988\mathrm{N} \qquad (9)$$

$$\mathrm{N} = \frac{\mathrm{k}}{(1-\mathrm{k})\eta_{\mathrm{a}}}\mathrm{RZT}\left(\varepsilon_{\mathrm{m}}{}^{\frac{\mathrm{k}-1}{\mathrm{k}}} - 1\right)\dot{\mathrm{m}} \qquad (10)$$

The turbine of compressors can be driven either by electricity or natural gas. It is more economical to use turbines driven by natural gas in transmission pipelines. Therefore, the fuel cost of compressors depends on the price of natural gas. It is given by following relation [8].

$$\mathrm{CC_{fuel}} = \frac{\mathrm{N}(3.1536 * 10^{7})\mathrm{C_{NG}}}{\eta_{\mathrm{a}}\eta_{\mathrm{m}}} \qquad (11)$$

This study incorporates distribution delivery pipelines, necessitating the calculation of the remaining gas volume in the transmission line after specific deliveries using mass balance principles. The model assumes no gas accumulation or leakage within the network. Consequently, at any junction node, the total mass flow rate of gas entering must equal the total mass flow rate exiting. This mass balance can also be expressed in

terms of volumetric flow rates referenced to standard conditions [26]. At any junction node,

$$\sum Q_{in} = \sum Q_{out} \qquad (12)$$

Several critical constraints must be satisfied during the pipeline network design phase to ensure safe, realistic, economical, and stable operation. Dimensional constraints, such as those on pipeline diameter and wall thickness, ensure the physical feasibility of the design. Hydraulic and flow regime constraints guarantee that the system's operational behavior is realistic [26]. The safety and long-term economic viability of the design are governed by constraints on system stability, permissible gas velocity, and compressor pressure ratios [18]. A summary of all pertinent constraints and their corresponding mathematical formulations is provided in Table 2.

Table 2: Summary of constraints for the natural gas pipeline network design

No.	Constraint Description	Mathematical Equation
1	Pipeline Diameter	$\mathrm{D_o} \in [\mathrm{D1}, \mathrm{D2}, \mathrm{D3} \ldots.]$
2	Thickness Constraint	$\delta \in [\delta_2, \delta_2, \delta_3 \ldots.]$
3	Intensity Constraint	$\mathrm{P} < 0.9\mathrm{MAP}$ $\mathrm{MAP} = \frac{2(\mathrm{SMYS})\mathrm{D_f}\mathrm{L_f}\mathrm{J_f}\mathrm{T_f}\delta}{\mathrm{D_o}}$
4	Stability Constraint	$\frac{\mathrm{D_o}}{\delta} \leq 110$
5	Gas Velocity Constraint	$\mathrm{u_i} < \mathrm{u_{max}}$ $\mathrm{u_i} = 14.7349\left(\frac{\mathrm{Q_i}}{\mathrm{D_i^2}}\right)\left(\frac{\mathrm{P_b}}{\mathrm{T_b}}\right)\left(\frac{\mathrm{ZT}}{\mathrm{P}}\right)$ $\mathrm{u_{max}} = \frac{100}{\sqrt{\rho}}$
6	Flow Regime Constraint	$\mathrm{R_e} \geq \mathrm{R_{ec}}$ $\mathrm{R_e} = 0.5134\left(\frac{\mathrm{P_b}}{\mathrm{T_b}}\right)\left(\frac{\mathrm{GQ_i}}{\mu \mathrm{D_i}}\right))$ $\mathrm{R_{ec}} = 35.235\left(\frac{\mathrm{e}}{\mathrm{D_i}}\right)^{-1.1039}$
7	Hydraulic Constraint	$\mathrm{Q_i} = 77.54\left(\frac{\mathrm{T_b}}{\mathrm{P_b}}\right)\left(\frac{{\mathrm{P_{i,in}}}^2 - {\mathrm{P_{i,out}}}^2}{\mathrm{L_i G T Z f_i}}\right)^{0.5} \mathrm{D}$ $\frac{1}{\sqrt{\mathrm{f_i}}} = -2\log\left(\frac{\mathrm{e}}{3.7\mathrm{D_i}} + \frac{2.825}{\mathrm{R_e}\sqrt{\mathrm{f_i}}}\right)$
8	Compression Ratio	$1.2 \leq \varepsilon_m \leq 1.6$

The developed mathematical model is inherently nonlinear. Analysis reveals that it incorporates both discrete and continuous decision variables. Discrete variables include the pipeline diameter, wall thickness, and the number of compressors. In contrast, variables such as compression ratio, pipeline length, and pressure are continuous. Consequently, the optimization problem is classified as a Mixed-Integer Nonlinear Programming (MINLP) problem. In the literature, a range of optimization techniques have been applied to natural gas pipeline network problems. These commonly include metaheuristic approaches—such as genetic algorithms, simulated annealing, and particle swarm optimization—as well as gradient-based methods.

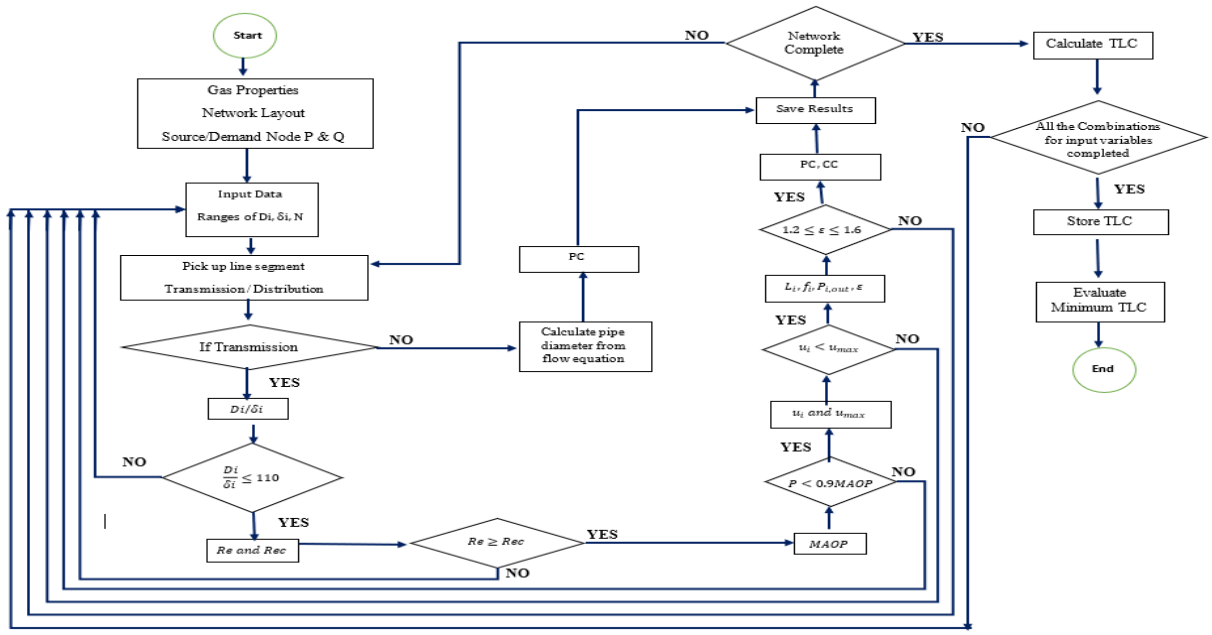

Figure 2: Optimization Algorithm

This study employs an exhaustive search (Rank) optimization technique, selected based on the characteristics of the formulated mathematical model. This technique evaluates all feasible combinations of the decision variables against the defined technical constraints. For each combination that satisfies all constraints, the Total Lifecycle Cost (TLC) is computed. The variable set yielding the minimum TLC is identified as the optimal design. The structure of the optimization algorithm, which integrates the objective function, governing equations, and constraints, is illustrated in Figure 2. The algorithm is logically segmented into three sequential modules: (1) data input, (2) constraint validation, and (3) calculation of the optimal TLC. A description of each module follows.

The algorithm was implemented and executed in MATLAB R2017b. Simulations were performed on a computer with an Intel Core i7-7500U CPU, 8 GB of RAM, and the Windows 10 operating system. The complete MATLAB code for the optimization algorithm is provided in the Appendix. The code accepts network specifications, operating conditions, and input variable ranges as inputs, iteratively processes each combination through the constraint validation module, and outputs the optimal results.

1. Section 1 handles the input data, which encompasses the pipeline network layout, specified gas flow rates, demand node pressures, allowable ranges for input variables, and the requisite physical, thermodynamic, and fluid flow properties. Pipeline diameter and wall thickness are treated as discrete decision variables. Since gas pipeline construction must adhere to specific industrial standards, permissible values for these dimensions are constrained to a discrete set conforming to established piping specifications. For this study, dimensions are selected from the API 5L specification, a standard for carbon steel line pipe commonly employed in oil and gas transmission systems.
2. Section 2 performs the filtration of input variable combinations against the defined technical constraints. The process begins by evaluating the stability constraint for all given pipeline diameter and wall thickness pairs. Combinations violating this constraint are immediately filtered out. This sequential validation procedure is then applied to all remaining constraints. Ultimately, only those variable combinations that satisfy every constraint are retained for subsequent analysis.

Section 3 calculates the Total Lifecycle Cost (TLC) for each feasible variable combination retained from the constraint validation phase. The computed TLC values for all valid combinations are stored. The algorithm subsequently identifies the specific variable set that yields the minimum TLC, which is thereby designated as the optimal pipeline network design.

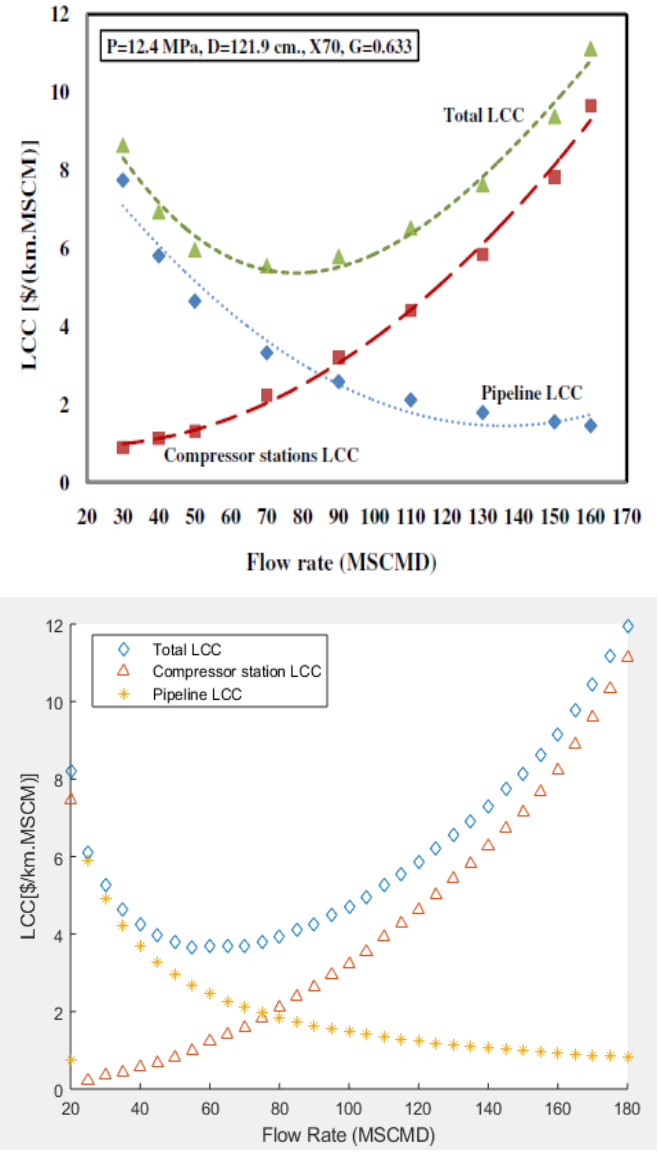

Figure 3: Effect of gas flow rate on a total life cycle cost (LCC) of pipeline (a) Najibi et al[8] (P = 12.4MPa, D = 121.9 cm, X70, G = 0.633) (b) Present Model.

As outlined in the mathematical model section, the governing equations were sourced from established literature. To ensure the model's accuracy and validity, its results require verification against a known benchmark. For this purpose, the output of the developed optimization model is compared with the published results of Najibi et al., who optimized the total lifecycle cost for a 1040 km transmission line operating at 12.4 MPa[8]. Figures 3a and 3b illustrate the effect of gas flow rate on the lifecycle cost, as reported by Najibi et al. and as calculated in the present work, respectively. The presented total cost is normalized per unit pipeline length and unit gas flow rate, representing the sum of the pipeline and compression station costs. The comparative analysis shows that both models capture the same fundamental trends. The compression station cost exhibits a positive correlation with flow rate, driven by an increase in required compressor power. While the absolute pipeline cost for a fixed diameter is constant, its normalized cost per unit flow rate decreases. The close agreement between the two figures confirms that the results of the present model are comparable to the established benchmark.

4. Results and Discussion:

The results are presented in two sections for better understanding of the mathematical model. The first section explains the analysis of constraints as a function of the input variables, and the second summarizes the effect of different operating variables on the optimum total life-cycle cost.

4.1. Constraints Analysis:

To guarantee safe, economical, and stable operation, the mathematical model establishes critical constraints that must not be violated, as illustrated in Figure 4. To prevent pipeline erosion, the fluid velocity must remain below a defined maximum threshold. This velocity is determined by the actual volumetric flow rate and the pipeline's cross-sectional area. Figure 4a illustrates the relationship between pipeline velocity, maximum allowable velocity, pipeline diameter, and gas flow rate at a constant operating pressure of 12.4 MPa. The analysis reveals an inverse relationship between fluid velocity and pipeline diameter, and a direct relationship with gas flow rate. In contrast, the maximum allowable velocity, which is independent of both diameter and flow rate, remains constant for the given pressure and is represented by a horizontal line in the figure. It is evident that the velocity constraint is violated under conditions of high gas flow rates and small pipeline diameters. The maximum allowable velocity is primarily a function of gas density. Given the assumption of an isothermal pipeline system, gas density—and consequently, the erosional velocity—varies directly with operating pressure. Figure 4b illustrates the effect of operating pressure on both the actual pipeline velocity and the erosional velocity for various pipeline diameters at a constant gas flow rate of 100 MMSCFD. As shown, both velocities exhibit an inverse relationship with increasing pressure. Notably, for a pipeline diameter of 91.44 cm, the velocity constraint is violated at operating pressures below 7 MPa. Transmission gas pipelines typically

operate under high pressures, commonly ranging from 3.5 to 12.4 MPa (500 to 1800 psi). These conditions impose significant vertical stress on the pipeline wall. Consequently, the operating pressure must be maintained below a defined Maximum Allowable Pressure (MAP) to ensure structural integrity. As a standard safety margin, the operating pressure is constrained to values at or below 90% of the MAP.

(a)

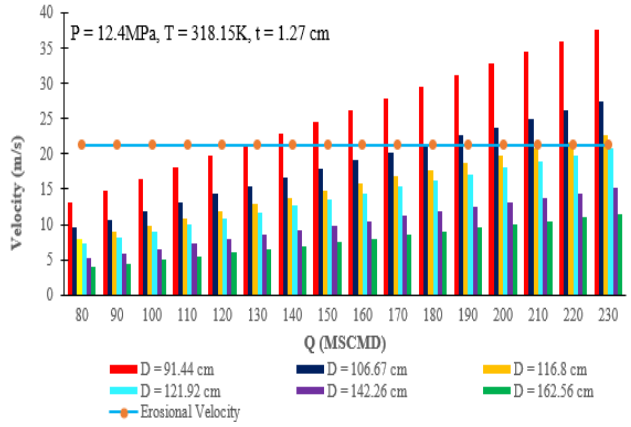

(b)

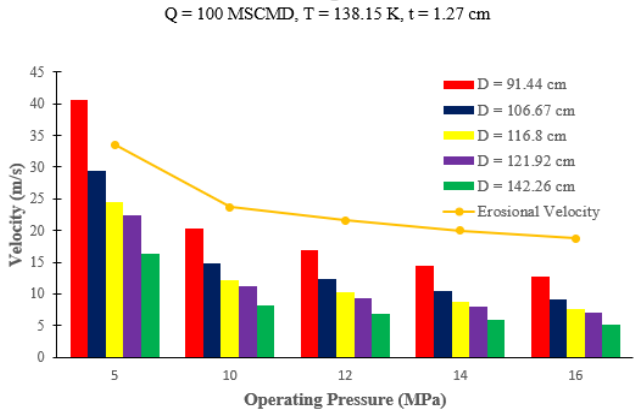

(c)

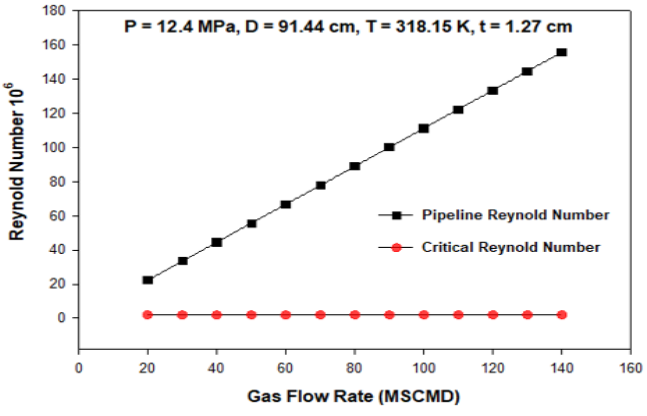

(d)

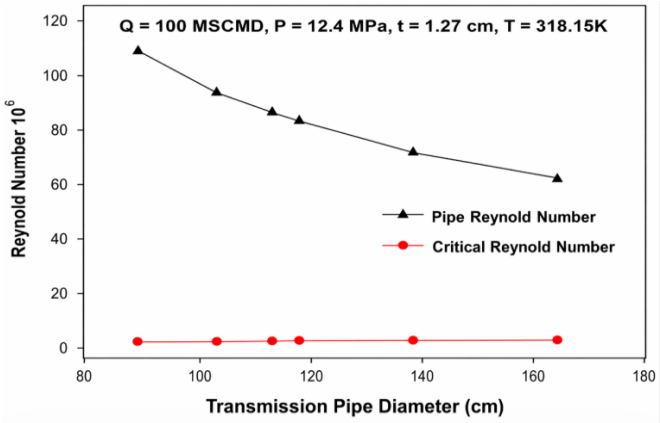

(e)

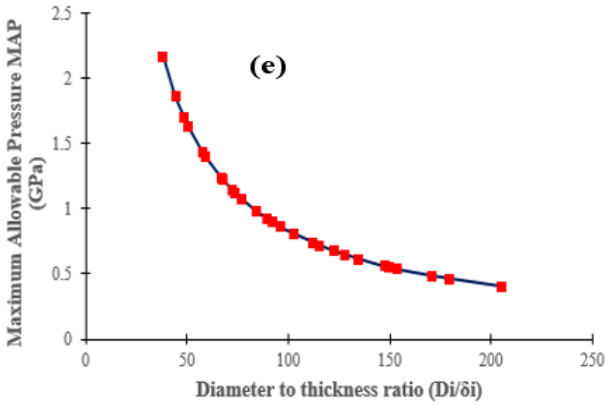

Figure 4: Effect of pipeline diameter on the maximum and erosional velocity at (a) constant pressure of 12.4MPa, and (b) constant flow rate of 100 MMSCFD; Reynold Number as the function of (c) gas flow rate and (d) pipeline diameter at a constant operating pressure; (e) Maximum Operating Pressure as the function of transmission pipeline diameter to thickness ratio

The MAP is a function of the pipe material's yield stress, diameter, and wall thickness. The yield stress itself is influenced by the material of construction and operating temperature. Figure 4e illustrates the MAP as a function of the pipeline's diameter-to-thickness (D/t) ratio, demonstrating an exponential decay with increasing D/t. To maintain stable operation and mechanical integrity, the D/t ratio is typically kept below a threshold of 110, as higher ratios compromise the pipeline's structural stability.

In addition to mechanical constraints, the hydraulic behavior of the gas must be characterized to ensure efficient and predictable system operation. Gas flow in

transmission pipelines is characterized by a fully rough, turbulent regime. This condition is satisfied when the flow's Reynolds number exceeds a critical threshold. The Reynolds number is a function of pipeline diameter, flow velocity, and the gas's dynamic viscosity and density. In contrast, the critical Reynolds number is determined primarily by the pipe's relative surface roughness. Figure 4c presents the calculated Reynolds number and the critical Reynolds number as functions of gas flow rate, with pipeline diameter and operating pressure held constant. Similarly, Figure 4d illustrates these values as functions of pipeline diameter, with flow rate and pressure constant. Analysis of both figures confirms that the operational Reynolds number exceeds the critical value across the entire range of diameters and flow rates considered. This validates the initial assumption that the natural gas flow occurs within the fully turbulent regime, which aligns with practical operational conditions. In summary, the analysis confirms that under standard operating conditions, the pipeline design maintains structural integrity within the specified pressure and D/t limits while operating in the hydraulically predictable fully turbulent flow regime."

4.2. Effect of Transmission Piepline Diameter:

The overall compression cost is a direct function of the required number of compressors. Figure 5a illustrates the relationship between the number of compressors and transmission pipeline diameter, with operating pressure and gas flow rate held constant. The number of compressors decreases significantly with increasing pipeline diameter; a consequence of the reduced frictional pressure drops in larger conduits. The Total Lifecycle Cost (TLC) for the pipeline network is the sum of the total pipeline capital cost and the total compression cost. Pipeline cost is governed by diameter, wall thickness, and length, whereas compression cost is dictated by the required compressor power and count. The composite economic behavior is presented in Figure 5b, which plots total pipeline cost, compression cost, and TLC against transmission pipeline diameter. As shown, the pipeline cost exhibits a near-linear increase with diameter, while the compression cost declines due to the reduction in pressure drop. Consequently, the TLC curve demonstrates a distinct minimum at a specific diameter for a given operating pressure and flow rate. Analysis of Figure 5b identifies an optimum pipeline diameter of 121.92 cm for a gas flow rate of 130 MSCMD, corresponding to the point of minimum TLC. It is important to note that this optimum is a function of system parameters and will vary with changes in gas flow rate and operating conditions. While an optimum diameter exists for a given operating point, the underlying economic trade-offs are dynamically influenced by the system's operational envelope. The following analysis quantifies the sensitivity of the TLC to variations in gas flow rate and operating pressure.

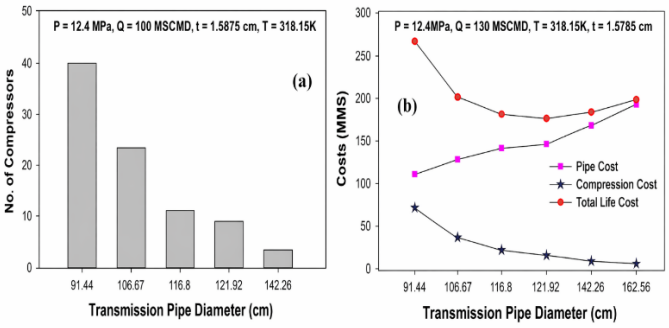

Figure 5: (a) Number of Compressors as the function of transmission pipe diameter (b) Various cost parameters as a function of transmission pipe diameter

The mathematical model reveals that the Total Lifecycle Cost (TLC) is a function of key operating parameters, namely operating pressure, gas flow rate, and pipeline diameter. Figure 6a presents the TLC as a function of gas flow rate and pipeline diameter for a constant operating pressure. The analysis shows that for a fixed diameter, TLC increases with higher gas flow rates.

This trend is driven by a corresponding rise in compression cost, which escalates to overcome the greater frictional losses associated with increased volumetric throughput. Conversely, Figure 6b illustrates the TLC as a function of operating pressure and pipeline diameter at a constant flow rate. Here, TLC exhibits a decreasing trend with rising operating pressure. This reduction is attributable to a lower required compression ratio at elevated pressures, which directly diminishes the compression power requirement and, consequently, the overall compression cost, leading to a lower total lifecycle cost for the network.

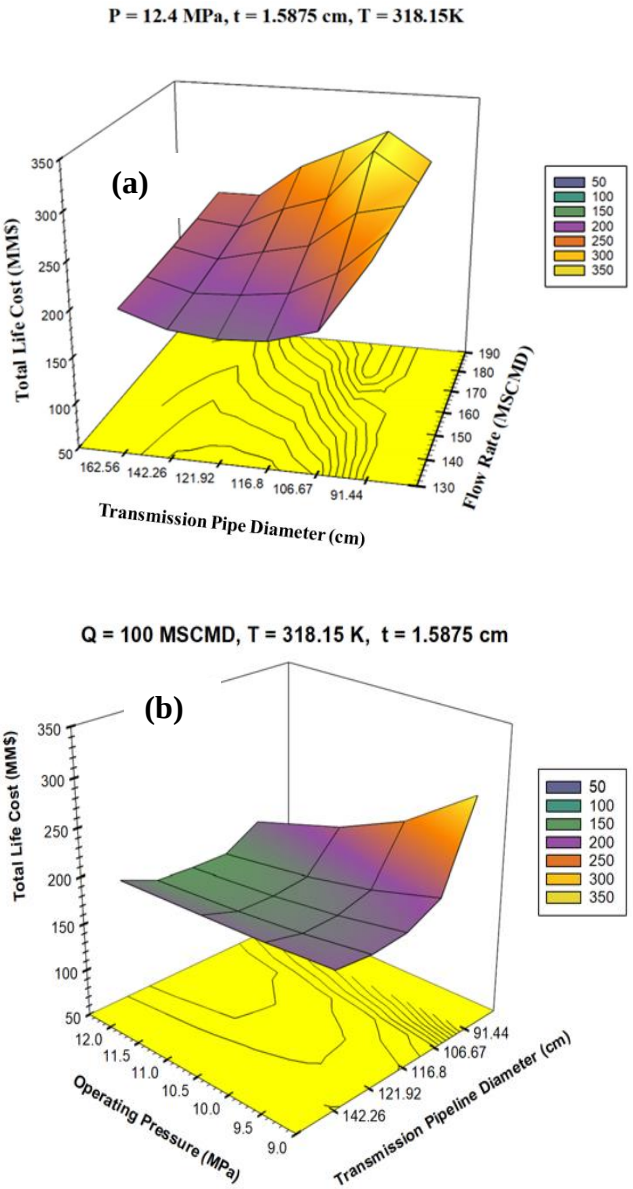

Figure 6: Total life cost as the function of transmission pipe diameter (a) Flow rate (b) Operating Pressure

This case study analyzes two branch line segments within a distribution network, identified as Segments 23 and 45. These segments have predefined demand node pressures and flow rates. In a typical natural gas network, a high-pressure transmission main supplies gas to lower-pressure distribution branches, which deliver it to end-users. While transmission lines often operate at a constant pressure, distribution line pressures vary according to local demand. Pressure regulators are conventionally installed at distribution endpoints to ensure supply meets demand specifications.

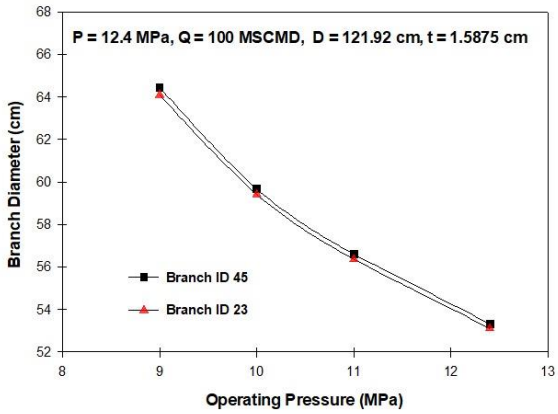

Figure 7: Branch line segment diameters as the function of operating pressure at constant transmission pipeline diameter and gas flow rate

For the purposes of this analysis, the diameters for Segments 23 and 45 were calculated directly using the flow equation, with demand pressure and flow rate fixed as inputs, thereby omitting downstream pressure regulators. Figure 8 plots the calculated distribution pipeline diameters against operating pressure, with the transmission pipeline diameter and gas flow rate held constant. The results demonstrate an inverse relationship: the required distribution pipeline diameter decreases as the operating pressure increases. Furthermore, the calculated diameters for both segments are nearly identical. This convergence is attributed to the similarity in their specified demand pressures, segment lengths, and gas flow rates.

Conclusion:

In this study, the effect of different operating conditions on total life cost of natural gas pipeline network were studied. A comprehensive constraint analysis was conducted based on the input variables. The input variables include the transmission pipeline diameter, thickness and number of compressors. A mathematical model was developed to calculate the optimum total life cost of the pipeline network in this study. As compared to previous studies, this model involves the total life cost of both transmission and distribution pipelines. The rank optimization technique has been used for the model to obtain global minima. A MATLAB code was developed to execute the established mathematical model. The model was applied on the natural gas pipeline network case study.

The constraint analysis results showed that the pipeline velocity increases with gas flow rate while decreases with pipeline diameter. The erosional velocity changed by varying the operating pressure. The Reynold number appeared to be greater than critical value for the specified range of input variables. The maximum operating pressure decreased exponentially with diameter to thickness ratio. Effect of different parameters such as operating pressure, transmission pipeline diameter, gas flow rate, number of compressors on the total life cost were studied. The results showed that total life cost increases by increasing gas flow rate while decreases with operating pressure. At the base operating conditions (130 MSCMD & 12.4 MPa), the minimum total life cost was found to be at the pipeline diameter of 121.92 cm. The models calculated the distribution pipeline diameter based on the operating conditions. The distribution pipeline diameter was observed to be decreased with operating pressure. The preliminary pipeline network design can be done using this study. The proposed model offers a practical and robust decision-support tool for pipeline operators and energy planners to minimize life-cycle costs while ensuring safe and efficient natural gas transmission and distribution under varying field conditions.

Acknowledgement

The authors gratefully acknowledge the department of Chemical Engineering, UET Lahore efforts for access to laboratory equipment and facilities.

Funding

The authors did not receive any funding from any institution or agency.

Ethical Approval

Not applicable

Competing Interests

The authors declare that they have no conflict of interest.

Availability of data and materials

The authors confirm that the data supporting the findings of this study are available within the article.

References

[1] A. Ahmad and M. Jha, "Status of petroleum sector in Pakistan: A review," Oil and Gas Business.

[2] I. Ahmed, N. Gul, and O. Farooq, Pakistan Economic Survey 2021–2022. Islamabad, Pakistan: Finance Division, Government of Pakistan, 2022, pp. 1–6.

[3] Z. Haider, "Pakistan, Iran sign deal on natural gas pipeline," Reuters, pp. 1–8, 2010.

[4] Shardul, "Pakistan ratifies Iran - Pakistan pipeline agreement," Natural Gas News, pp. 2–4, 2013.

[5] A. Sahabi, "Open the window of rapprochement cautiously," Tehran Times, pp. 1–6, 2021.

[6] Y. Wang, C. H. Tian, J. C. Yan, et al., "A survey on oil / gas pipeline optimization: Problems, methods and challenges," in Proc. IEEE Int. Conf. Service Oper. Logistics, Inform. (SOLI), 2012, pp. 150–155.

[7] A. Zolfaghari, H. Razavi, and M. Izadi, "Optimum design of natural gas trunk line using simulated annealing algorithm," Int. J. Oil, Gas Coal Technol., vol. 26, pp. 281–301, 2020.

[8] H. Najibi and N. Taghavi, "Effect of different parameters on optimum design for high pressure natural gas trunk-lines," J. Nat. Gas Sci. Eng., vol. 3, pp. 547–554, 2011.

[9] Z. Zhang and X. Liu, "Study on optimal operation of natural gas pipeline network based on improved genetic algorithm," Adv. Mech. Eng., vol. 9, pp. 1–8, 2017.

[10] E. K. Ejomarie and E. G. Saturday, "Optimal design of gas pipeline transmission network," GSJ, vol. 8, pp. 1–19, 2020.

[11] Z. Zheng and C. Wu, "Power optimization of gas pipelines via an improved particle swarm optimization algorithm," Pet. Sci., vol. 9, pp. 89–92, 2012.

[12] T. M. El-Shiekh, "The optimal design of natural gas transmission pipelines," Energy Sources, Part B: Econ., Plan., Policy, vol. 8, pp. 7–13, 2013.

[13] A. H. Alinia Kashani and R. Molaei, "Techno-economical and environmental optimization of natural gas network operation," Chem. Eng. Res. Des., vol. 92, pp. 2106–2122, 2014.

[14] F. Tabkhi, L. Pibouleau, C. Azzaro-Pantel, et al., "Total cost minimization of a high-pressure natural gas network," J. Energy Resour. Technol., vol. 131, no. 4, pp. 043002-1–043002-12, 2009.

[15] J. André and J. F. Bonnans, "Optimal structure of gas transmission trunklines," Optim. Eng., vol. 12, pp. 175–198, 2011.

[16] S. Siregar, E. Soewono, D. Siregar, et al., "Cost minimization model of gas transmission line for Indonesian SIJ pipeline network," ITB J. Eng. Sci., vol. 35, pp. 23–43, 2003.

[17] S. J. Montoya-O., W. A. Jovel-T., J. A. Hernández-R., et al., "Genetic algorithms applied to the optimum design of gas transmission networks," in Proc. SPE Int. Petroleum Conf. Exhib. Mexico, 2000, pp. 411–417.

[18] Y. Ruan, Q. Liu, W. Zhou, et al., "A procedure to design the mainline system in natural gas networks," Appl. Math. Model., vol. 33, pp. 3040–3051, 2009.

[19] D. De Wolf and Y. Smeers, "Optimal dimensioning of pipe networks with application to gas transmission networks," Oper. Res., vol. 44, pp. 596–608, 1996.

[20] Y. Wu, K. K. Lai, and Y. Liu, "Deterministic global optimization approach to steady-state distribution gas pipeline networks," Optim. Eng., vol. 8, pp. 259–275, 2007.

[21] Arsegianto, E. Soewono, and M. Apri, "Non-linear optimization model for gas transmission system: A case of Grissik - Duri pipeline," in Proc. SPE Asia Pacific Oil Gas Conf., 2003, pp. 367–375.

[22] B. Djebedjian, I. Shahin, and M. Naggar, "Gas distribution network optimization by genetic algorithm," in Proc. 9th Int. Congr. Fluid Dyn. Propulsion, Alexandria, Egypt, 2008, pp. 1558–1748.

[23] Y. Liang, J. Zheng, B. Wang, et al., "Optimization design of natural gas pipeline based on a hybrid intelligent algorithm," Adv. Intell. Syst. Comput., vol. 1031, pp. 1015–1025, 2020.

[24] M. I. Khan, "Comparative Well-to-Tank energy use and greenhouse gas assessment of natural gas as a transportation fuel in Pakistan," Energy Sustain. Dev., vol. 43, pp. 38–59, 2018.

[25] A. Demissie, W. Zhu, and C. T. Belachew, "A multi-objective optimization model for gas pipeline operations," Comput. Chem. Eng., vol. 100, pp. 94–103, 2017.

[26] E. S. Menon, Gas Pipeline Hydraulics. Boca Raton, FL, USA: CRC Press, 2005.